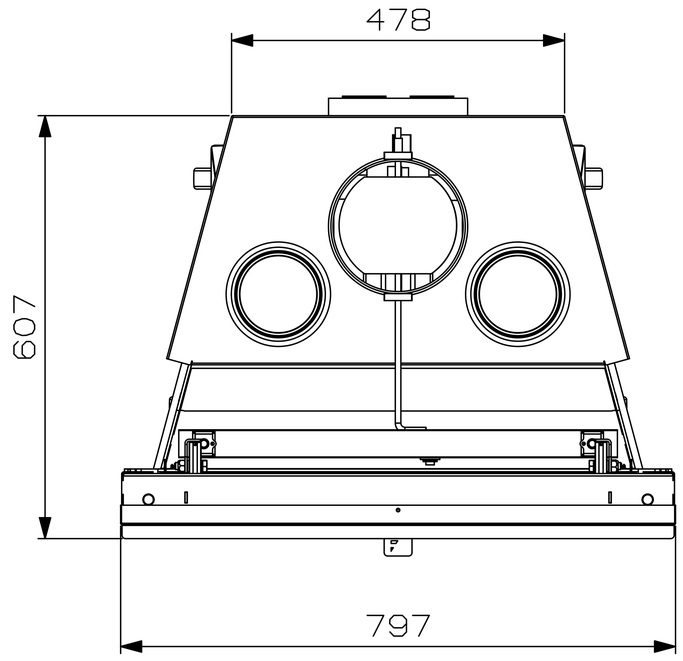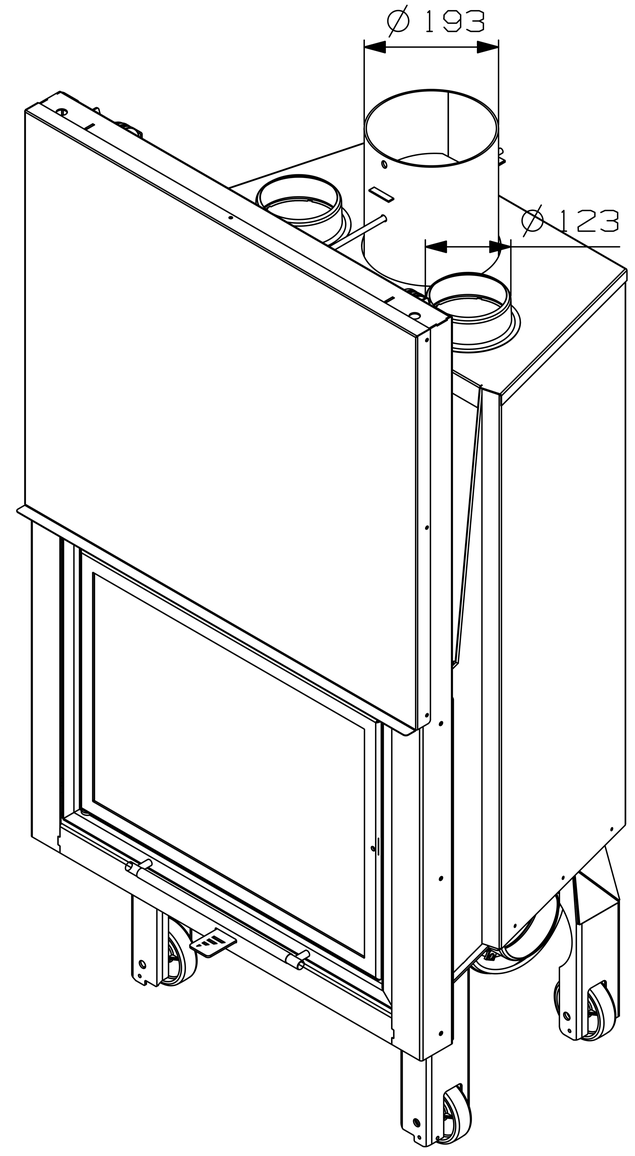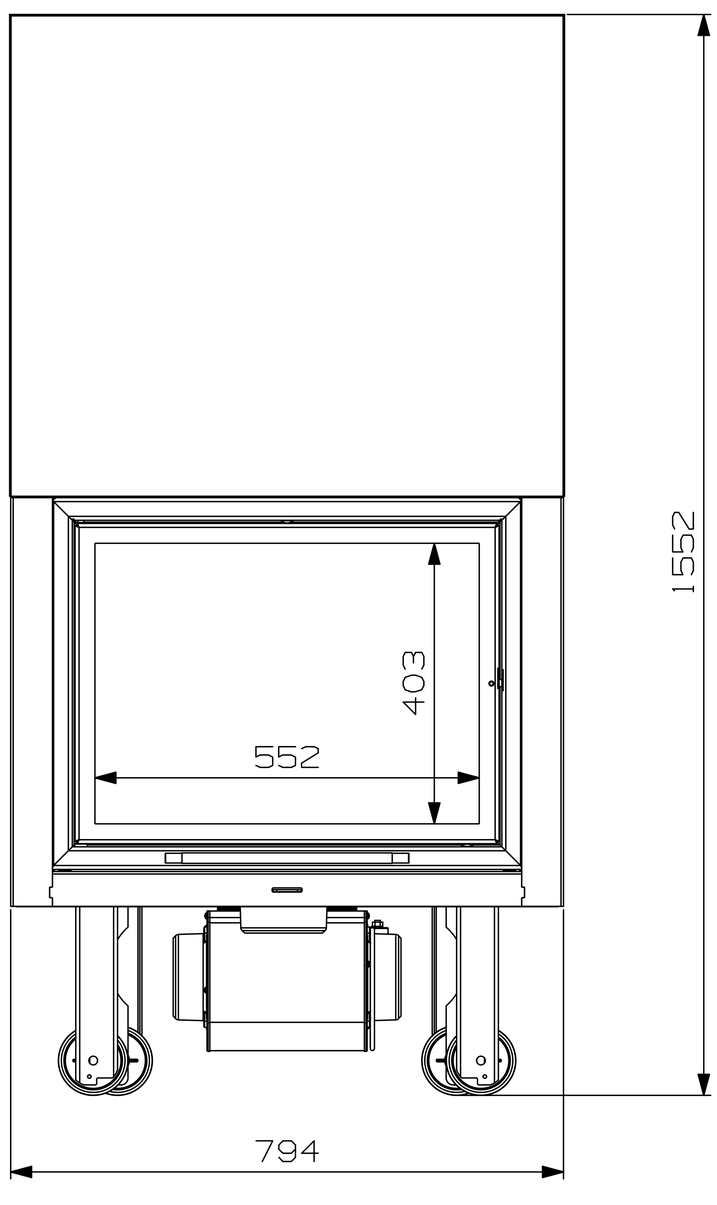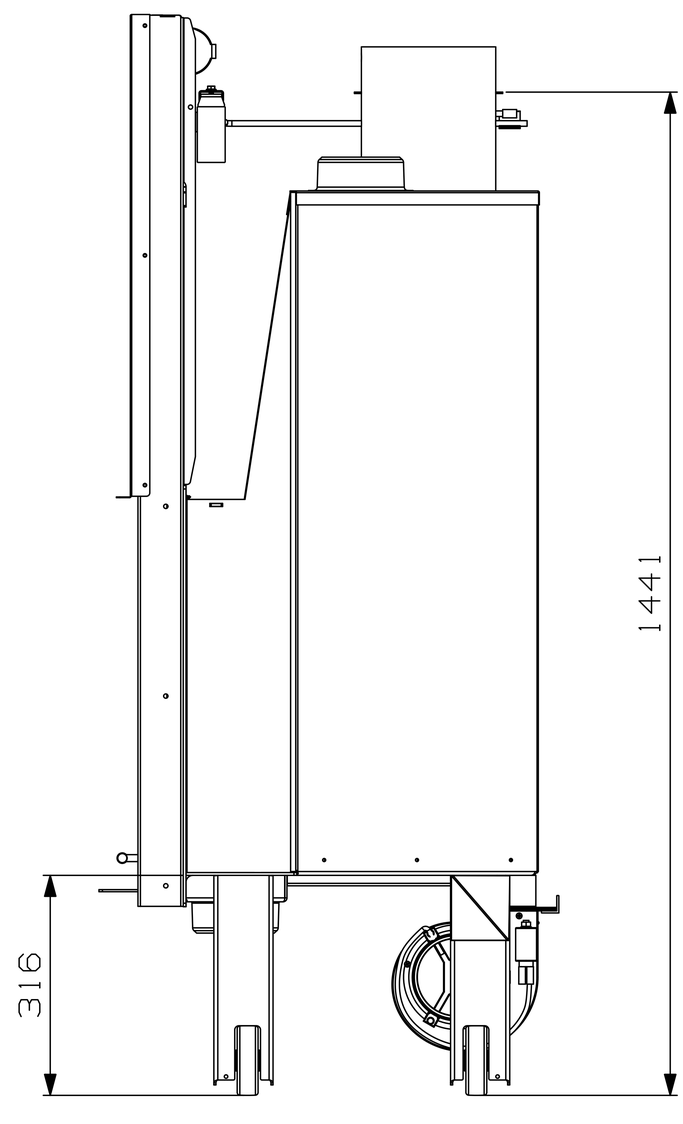AERO-S FLAT 70