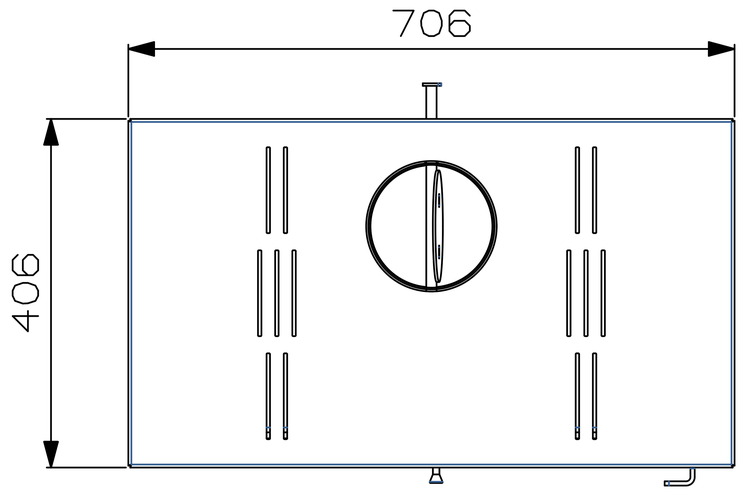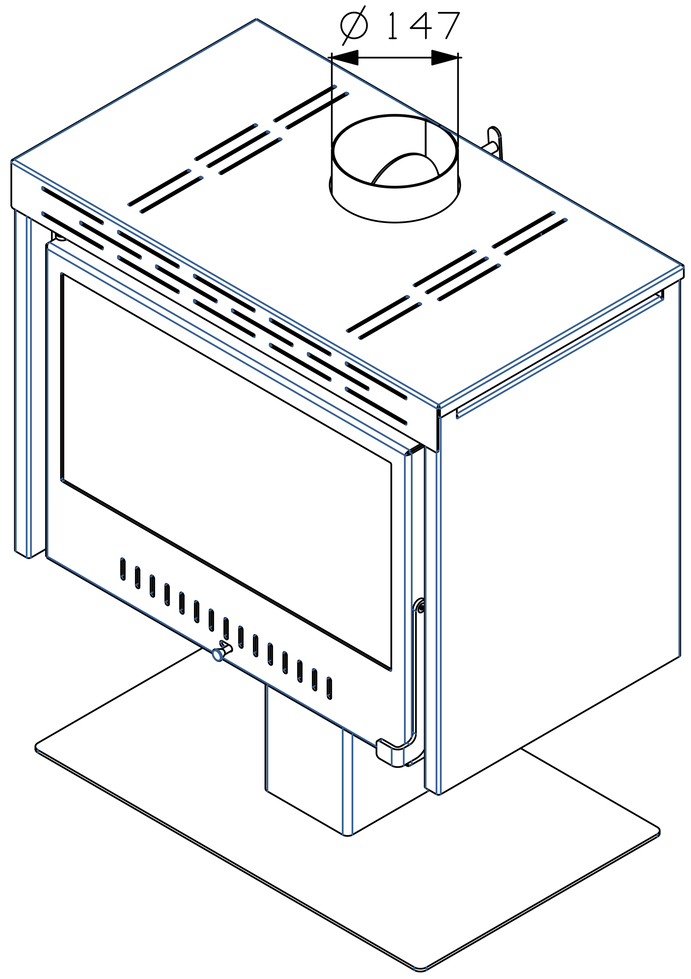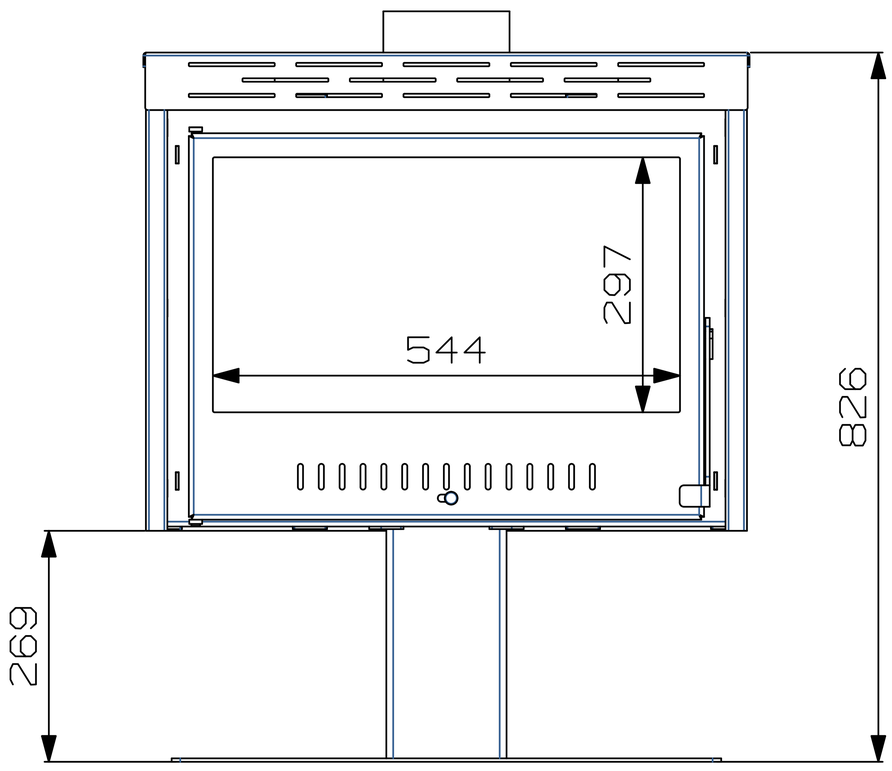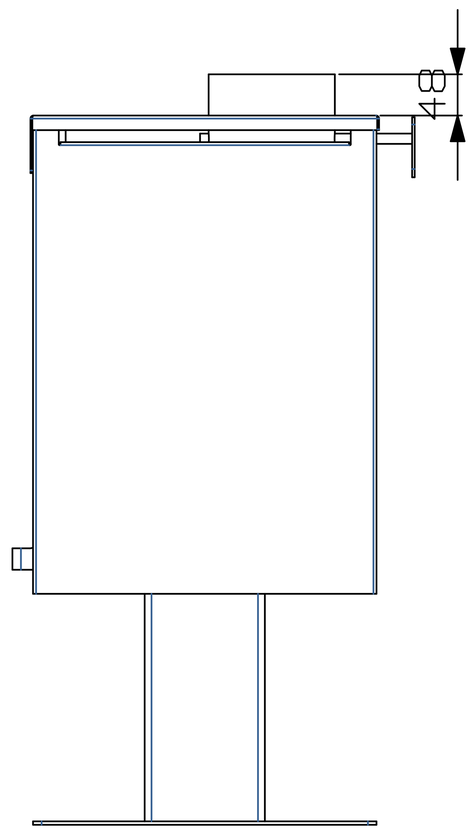FIRESTOVE V70 (Rectangular base)