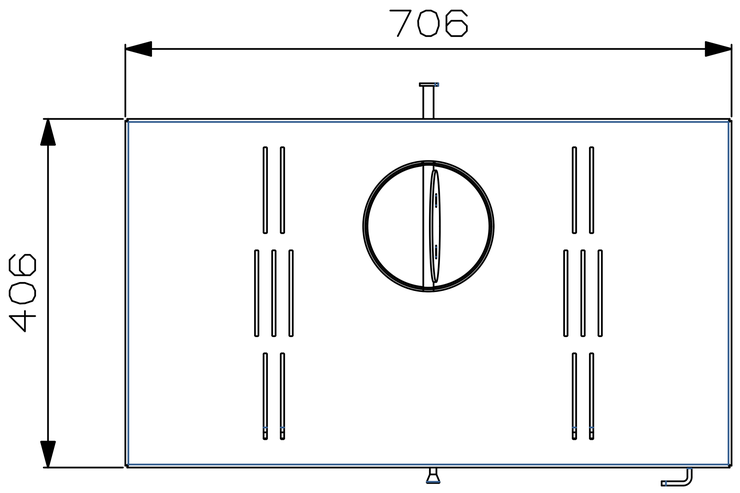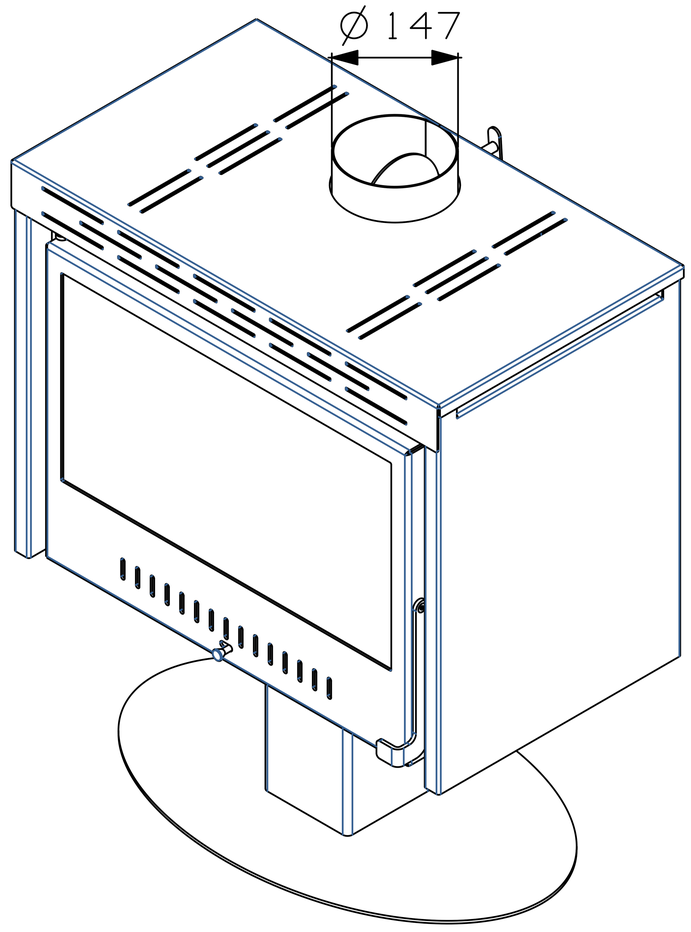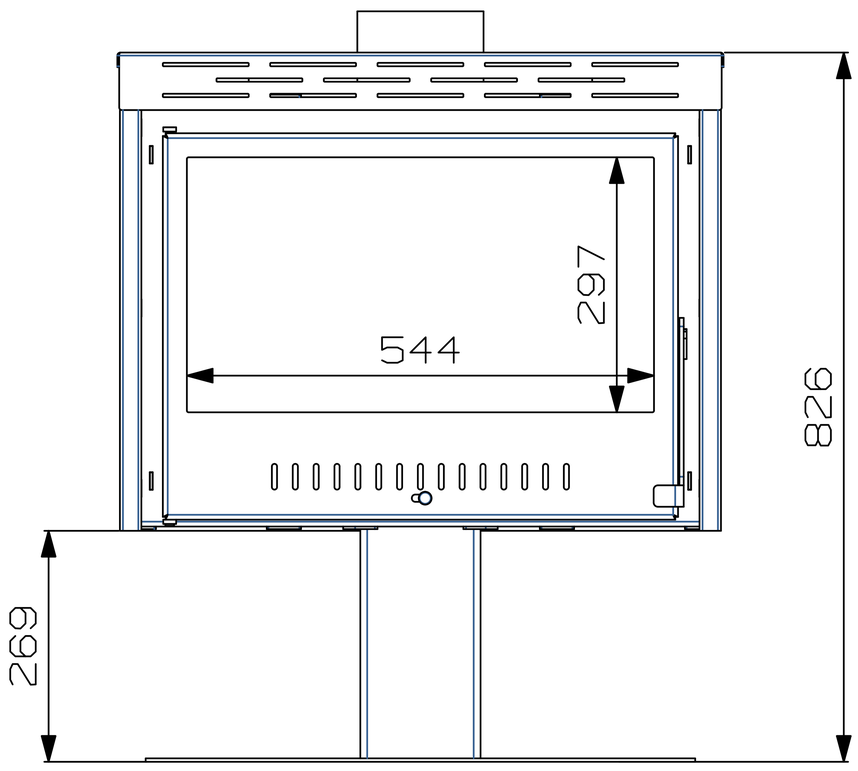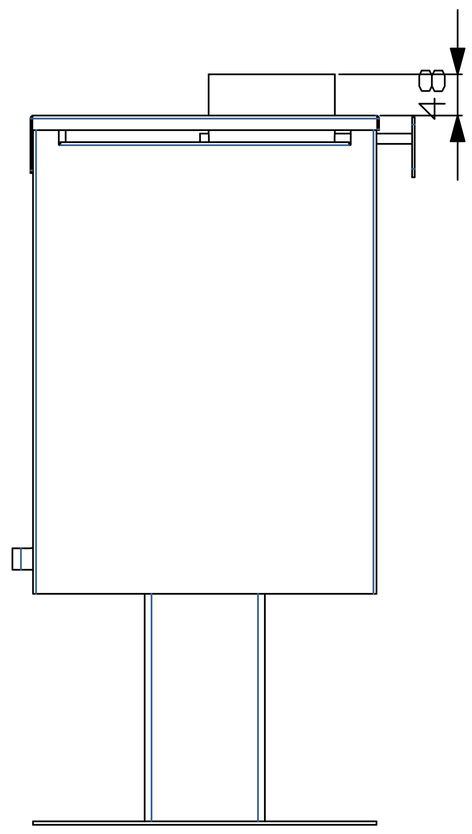FIRESTOVE V70 (Round base)